www.pinterest.com/pindark/boky-dark

BOKY

design frank janssens for dark

GOOD DESIGN USA 2012

German Design Award 2014 NOMINEE

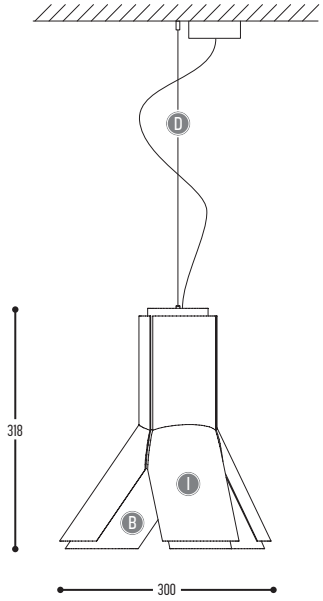

820-BB-001-DD-I

Alu	PE

1 LAMPS. | 1,6 kg | CE | 230 V | 0,5m | 850° | IP20

BB			CCC				DD		I		
COLOR BODY			TYPE				SUSP. CABLE		COLOR SHELLS		
03		White	001	E27		QD45 (MAX 28 W)	01	1,5 m	B		Black
04		Red					02	2,5 m	W		White
08		Orange				TC-TSE (MAX 9 W)					
						LED (MAX 12 W)					