ESSE 40 Tavolino
ESSE 40 Coffee table

Design - R&C REFLEX

top detail

PIANO
/ TOP

1

Vetro / *Glass*
sp. / *thick* 10 mm
bisello / *bevel* 30 mm

Vetro bronzo
/ *Bronze glass*

2

BASE
/ BASE
in vetro / *in glass*
sp. / *thick* 15 mm

Ottone
/ *Brass*

Ottone Dark
/ Dark Brass

Titanium
/ *Titanium*

Bronze
/ *Bronze*

Sunbronze
/ *Sunbronze*

Model 01

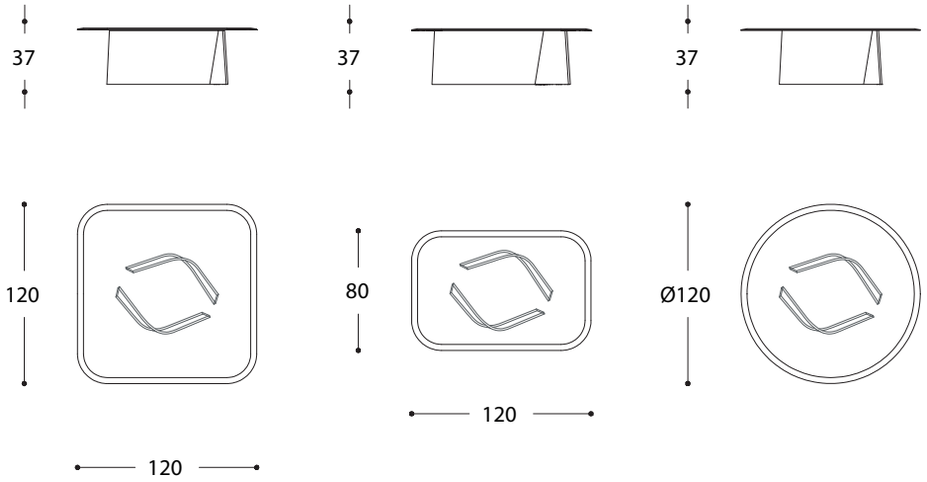
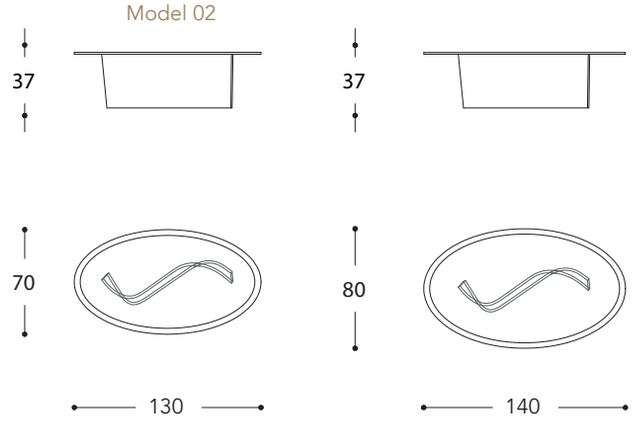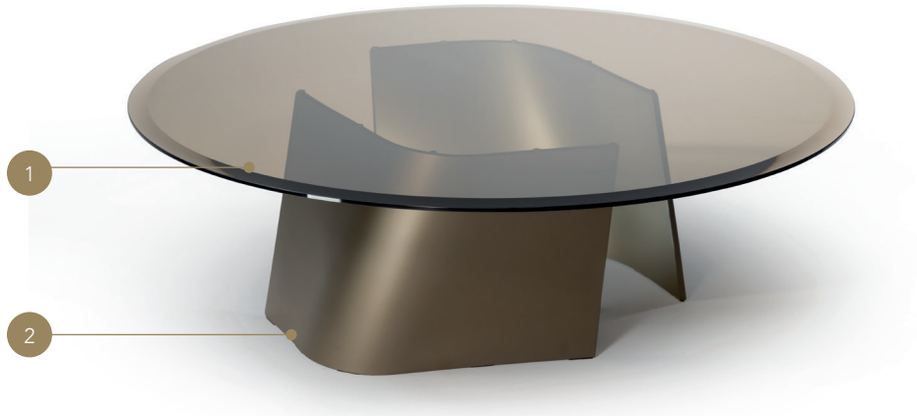
Model 02